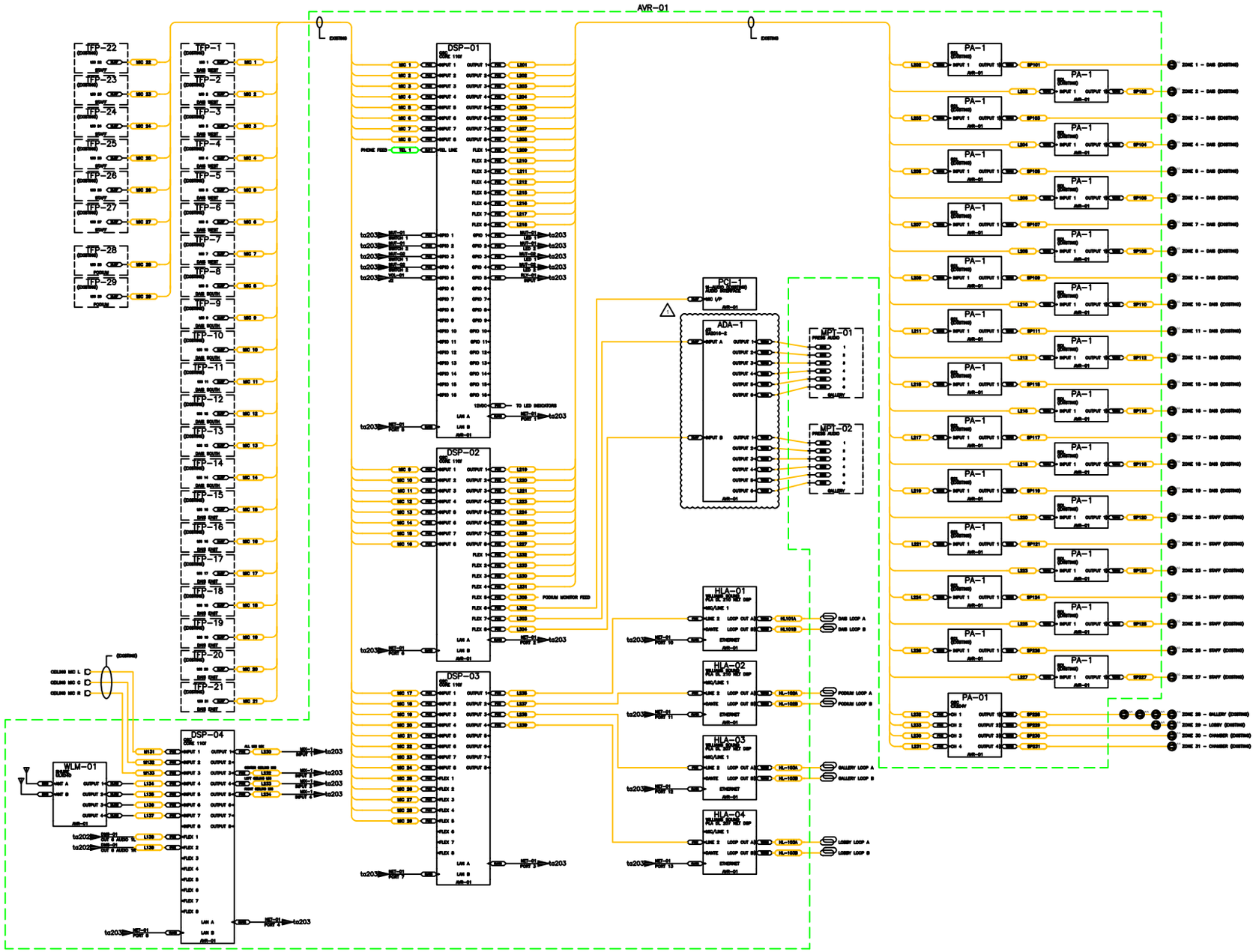

1 AUDIO SYSTEM SIGNAL FLOW DIAGRAM
SCALE:NO SCALE

ELECTRONIC Design company
www.edcsolutions.com
3123 E Hennepin Avenue · Minneapolis, MN 55413-2842
612.355.2300 · 800.777.7385 · fax 612.355.2332

DRAWING AND ALL CONTENTS COPYRIGHT © 2014 ELECTRONIC DESIGN COMPANY • MINNEAPOLIS, MINNESOTA. ALL RIGHTS RESERVED. INFORMATION CONTAINED HEREIN FOR USE ONLY WITH THE PROJECT FOR WHICH THE DRAWING HAS BEEN ISSUED. ANY USE OR REPRODUCTION FOR USE WITH ANY OTHER PROJECT IS SPECIFICALLY FORBIDDEN.

PROJECT: ELECTRONIC DESIGN COMPANY
COMMISSION CHAMBERS AUDIO VISUAL UPGRADE

SHEET TITLE: AUDIO VISUAL SYSTEMS
AUDIO SYSTEM SIGNAL FLOW DIAGRAM

REVISIONS		
NO.	DATE	DESCRIPTION

DRAWING MARKUPS		
TECH	DESCRIPTION	DATE

SALES PERSON: PD	PROJECT ENGINEER: KS
PROJECT MANAGER: JG	EDC JOB #: 0001
DRAWN BY: KS	DATE: 5/18/2018

SHEET NO.
ta201

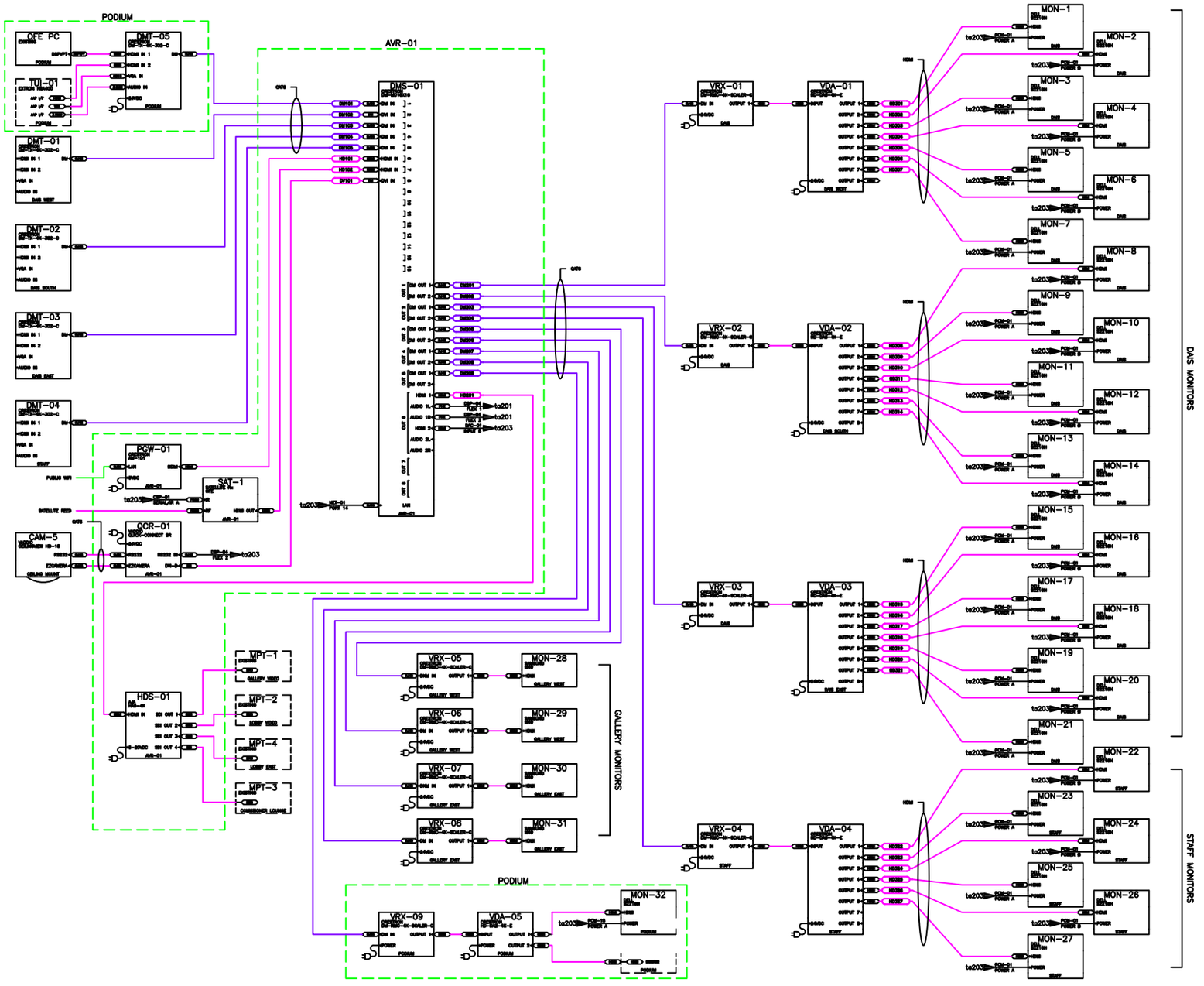

1 VIDEO SYSTEM SIGNAL FLOW DIAGRAM
SCALE:NO SCALE

ELECTRONIC Design company
www.edcsolution.com
3335 E Hennepin Avenue · Minneapolis, MN 55413-2842
612.355.2200 · 800.777.7385 · fax 612.355.2232

DRAWING AND ALL CONTENTS COPYRIGHT © 2014 ELECTRONIC DESIGN COMPANY • MINNEAPOLIS, MINNESOTA. ALL RIGHTS RESERVED. INFORMATION CONTAINED HEREIN FOR USE ONLY WITH THE PROJECT FOR WHICH THE DRAWING HAS BEEN ISSUED. ANY USE OR REPRODUCTION FOR USE WITH ANY OTHER PROJECT IS SPECIFICALLY FORBIDDEN.

PROJECT: ELECTRONIC DESIGN COMPANY
COMMISSION CHAMBERS AUDIO VISUAL UPGRADE

SHEET TITLE: AUDIO VISUAL SYSTEMS
VIDEO SYSTEM SIGNAL FLOW DIAGRAM

NO.	DATE	REVISIONS DESCRIPTION

DRAWING MARKUPS		
TECH	DESCRIPTION	DATE

SALES PERSON: PD	PROJECT ENGINEER: KS
PROJECT MANAGER: JG	EDC JOB #: 0001
DRAWN BY: KS	DATE: 5/18/2018

SHEET NO.
ta202

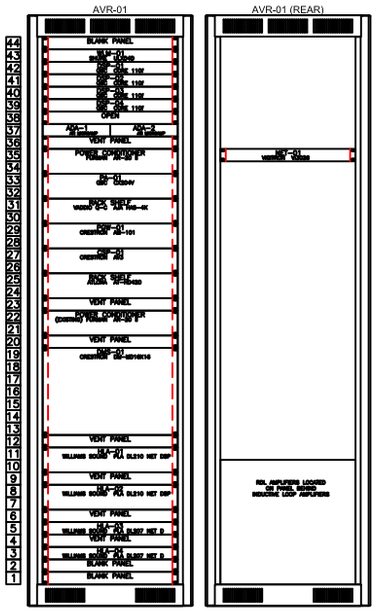

1 AUDIO VISUAL SYSTEM RACK RISER
SCALE:NO SCALE

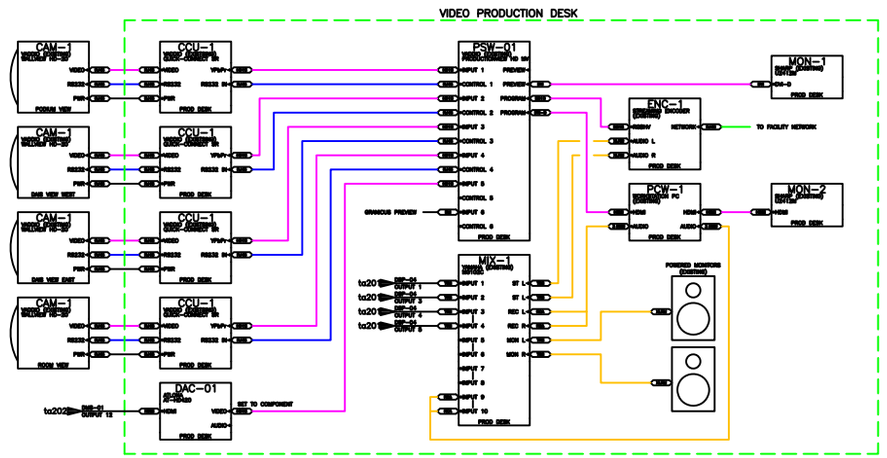

2 VIDEO PRODUCTION SIGNAL FLOW DIAGRAM
SCALE:NO SCALE

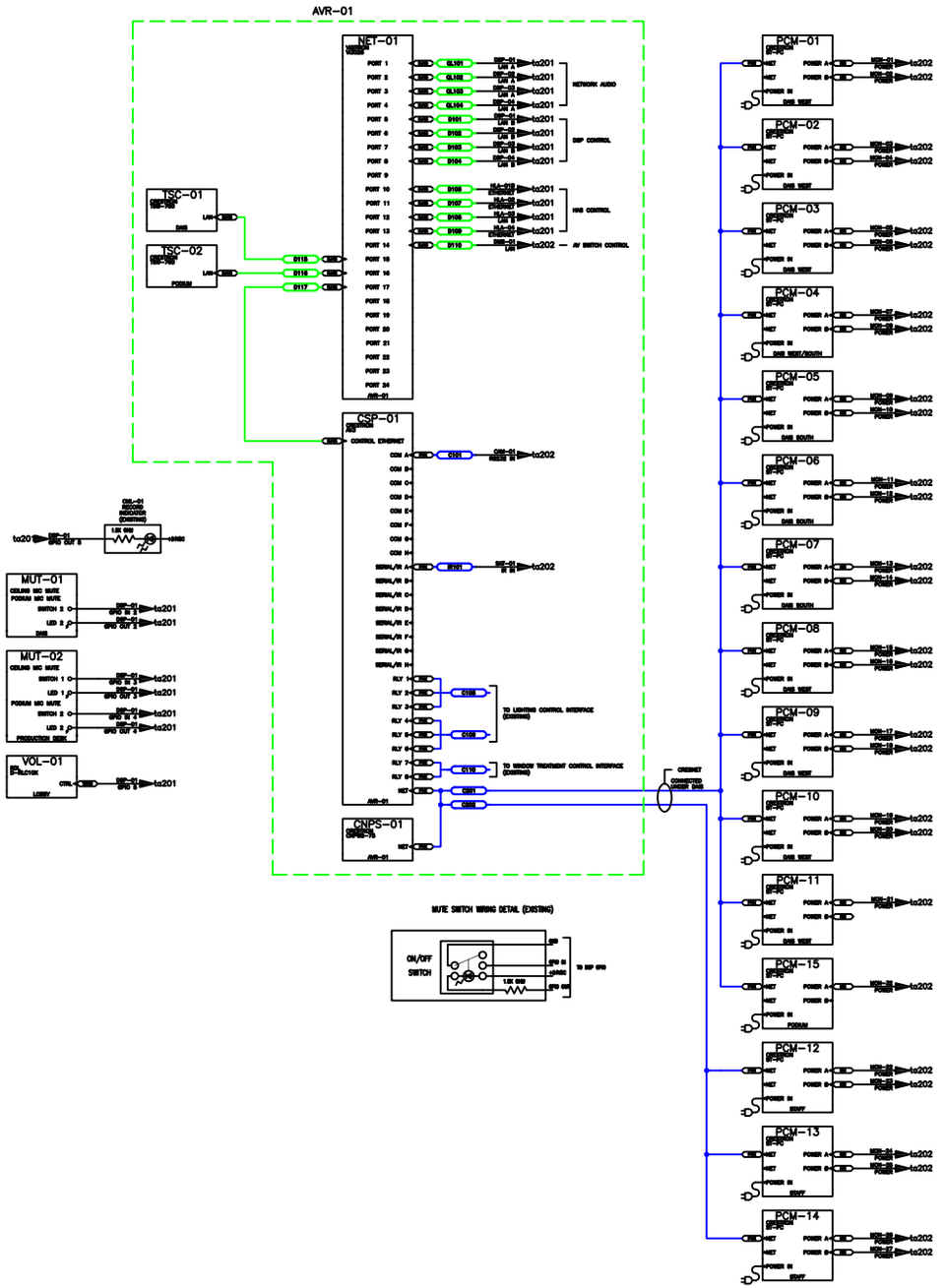

3 CONTROL SYSTEM SIGNAL FLOW DIAGRAM
SCALE:NO SCALE

ELECTRONIC Design company
www.edcsolutions.com
3125 E Hennepin Avenue · Minneapolis, MN 55413-2842
612.355.2300 · 800.777.7385 · fax 612.355.2332

DRAWING AND ALL CONTENTS COPYRIGHT © 2014 ELECTRONIC DESIGN COMPANY • MINNEAPOLIS, MINNESOTA. ALL RIGHTS RESERVED. INFORMATION CONTAINED HEREIN FOR USE ONLY WITH THE PROJECT FOR WHICH THIS DRAWING HAS BEEN ISSUED. ANY USE OR REPRODUCTION FOR USE WITH ANY OTHER PROJECT IS SPECIFICALLY FORBIDDEN.

ELECTRONIC DESIGN COMPANY
COMMISSION CHAMBERS AUDIO VISUAL UPGRADE
AUDIO VISUAL SYSTEMS
CONTROL SYSTEM SIGNAL FLOW DIAGRAM

PROJECT
SHEET TITLE

NO.	DATE	REVISIONS DESCRIPTION

TECH	DRAWING MARKUPS DESCRIPTION	DATE

SALES PERSON: PD	PROJECT ENGINEER: KS
PROJECT MANAGER: JG	EDC JOB #: 0001
DRAWN BY: KS	DATE: 5/18/2018

SHEET NO.
ta203